ADAPTORS/REDUCERS
EXPLOSION-PROOF ENCLOSURE ACCESSORIES

en
01 - 2020

DESCRIPTION

The adaptors series A/AA/B/C allow the conversion of the male thread into female thread or vice versa, large diameter into smaller diameter or vice versa. In addition they are also suitable to connect parts with different thread.

They are suitable for the installation in the industial plants with potentially hazardous atmosphere classified as Zone 1 and Zone 2 for gases and Zone 21 and Zone 22 for combustible dusts.

SPECIFICATIONS

EXPLOSION PROTECTION	**Conformity**	*ATEX Directive ATEX2014/34/UE*	
	Certification	*ATEX INERIS 17ATEX0012X* *IECEx INE 15.0016X*	
	Marking	*I M2* *Ex db I Mb* *Ex eb I Mb*	
		II 2 GD *Ex db IIC Gb* *Ex eb IIC Gb* *Ex tb IIIC Db IP66*	
	Standards	*EN 60079-0* *EN 60079-1* *EN 60079-7* *EN 60079-31*	*IEC 60079-0* *IEC 60079-1* *IEC 60079-7* *IEC 60079-31*
TECHNICAL DATA	**Ambient Temperature**	*-60°C / +300°C* *-30°C / +130°C with NBR O-Ring* *-60°C / +210°C with silicon O-Ring*	
	Material	*Stainless steel AISI 304 or AISI 316L* *Brass CW614N* *Brass CW614N nickel plated or anodized*	
	IP Rating	*IP 66*	
	Sealing	*NBR or silicon O-Ring (optional)*	

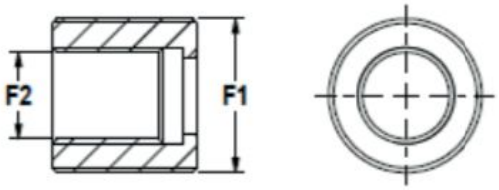

TYPE A

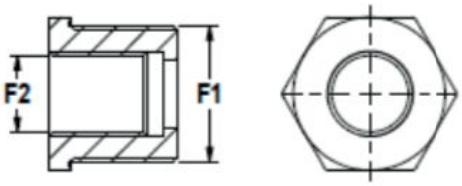

TYPE AA

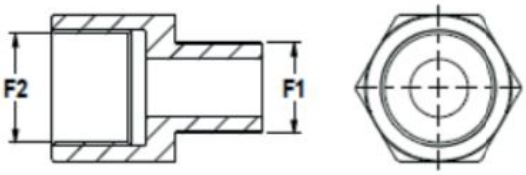

TYPE B

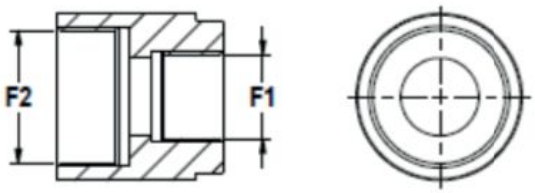

TYPE C

MATERIAL CHOICE

1. *Stainless steel AISI 316L*
2. *Stainless steel AISI 304*
3. *Brass*
4. *Nickel plated/anodized brass*

THREAD TYPE

M: metric ISO 262
G: ISO 228
N: NPT ANSI/ASME B1.20.1
C: EN10226-2 (ATEX only)
UNF available on request

OFFICINE MECCANICHE M.A.M. Srl
Via Vico Veneto, 32, 20090,
Pieve Emanuele (MI), ITALY

t +39 0290400419
f +39 0290400423
e info@mamitaly.it
w www.mamitaly.it

C.F./P.IVA 08707640960
C.S. € 40.000.00 I.V.
PEC m.a.m.srl@legalmail.it
Copyright © Mamitaly.it

YOUR SAFETY
Explosion Proof Enclosures

ADAPTORS/REDUCERS
EXPLOSION-PROOF ENCLOSURE ACCESSORIES

en
01 - 2020

FEMALE THREAD

MALE THREAD	R: reducer A: adaptor	METRIC							NPT - G -GK									
		M16	M20	M25	M32	M40	M50	M63	1/4"	3/8"	1/2"	3/4"	1"	1 1/4"	1 1/2"	2"	2 1/2"	3"
METRIC	M16	A	A	A	A	A	A	A	A	A	A	A	A	A	A	A	A	A
	M20	R	A	A	A	A	A	A	R	A	A	A	A	A	A	A	A	A
	M25	R	R	A	A	A	A	A	R	R	R	A	A	A	A	A	A	A
	M32	R	R	R	A	A	A	A	R	R	R	R	A	A	A	A	A	A
	M40	R	R	R	R	A	A	A	R	R	R	R	R	A	A	A	A	A
	M50	R	R	R	R	R	A	A	R	R	R	R	R	R	A	A	A	A
	M63	R	R	R	R	R	R	A	R	R	R	R	R	R	R	A	A	A
NPT - G -GK	1/4"	A	A	A	A	A	A	A	A	A	A	A	A	A	A	A	A	A
	3/8"	A	A	A	A	A	A	A	R	A	A	A	A	A	A	A	A	A
	1/2"	R	A	A	A	A	A	A	R	R	A	A	A	A	A	A	A	A
	3/4"	R	R	A	A	A	A	A	R	R	R	A	A	A	A	A	A	A
	1"	R	R	R	A	A	A	A	R	R	R	R	A	A	A	A	A	A
	1 1/4"	R	R	R	R	A	A	A	R	R	R	R	R	A	A	A	A	A
	1 1/2"	R	R	R	R	R	A	A	R	R	R	R	R	R	A	A	A	A
	2"	R	R	R	R	R	R	A	R	R	R	R	R	R	R	A	A	A
	2 1/2"	R	R	R	R	R	R	R	R	R	R	R	R	R	R	R	A	A
	3"	R	R	R	R	R	R	R	R	R	R	R	R	R	R	R	R	A

Code	Size
1	1/4"
2	3/8"
3	1/2"
4	3/4"
5	1"
6	1 1/4"
7	1 1/2"
8	2"
9	2 1/2"
10	3"

Code	Size
1	M16
2	M20
3	M25
4	M32
5	M40
6	M50
7	M63

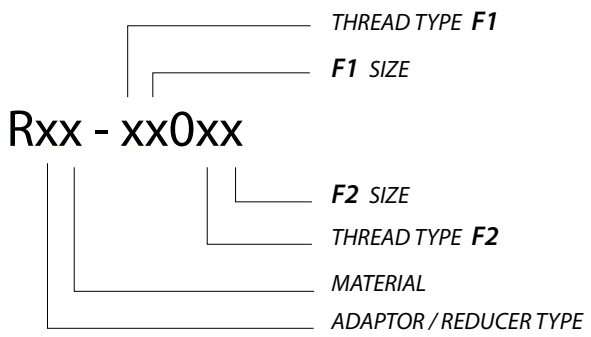

ORDER EXAMPLE

RA2-M30M2: Reducer type A in AISI 304
M25 male M20 female
RB3-N30M4: Adaptor type B in brass
½" NPT male ¾" NPT female

OFFICINE MECCANICHE M.A.M. Srl
Via Vico Veneto, 32, 20090,
Pieve Emanuele (MI), ITALY

t +39 0290400419
f +39 0290400423
e info@mamitaly.it
w www.mamitaly.it

C.F./P.IVA 08707640960
C.S. € 40.000.00 I.V.
PEC m.a.m.srl@legalmail.it
Copyright © Mamitaly.it

YOUR SAFETY
Explosion Proof Enclosures